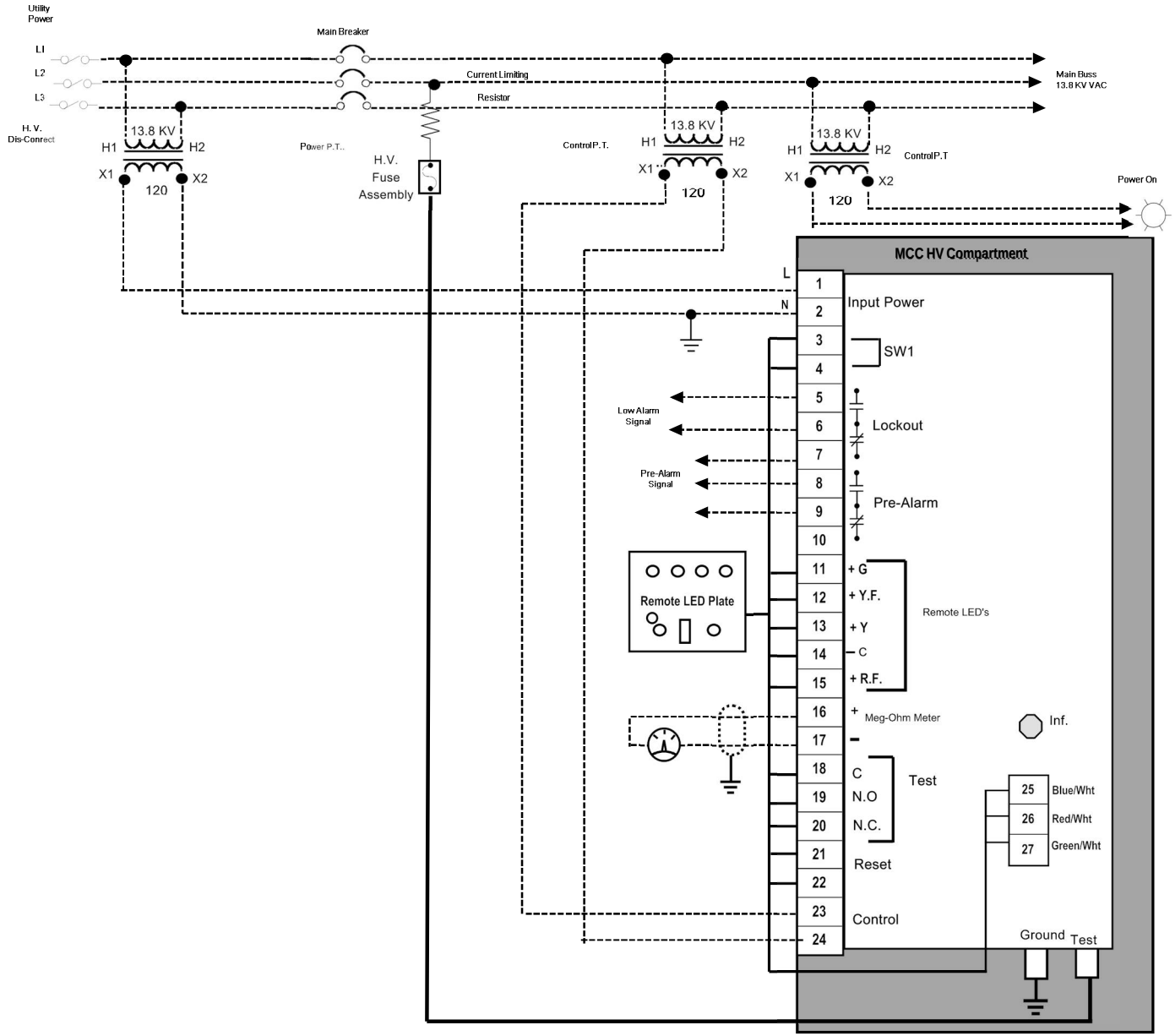

MEG alert Meg-Alert, Inc. 715-356-1499	Legend Remote Alarm Sheilded Wires Meg-Ohm Meter Customer Provided Wiring	Drawn By: KM Delamater Checked: R. Zelm	GP5000-CG-HV-AS with 2 Control Transformers Typical Wiring Diagram	Date: 1/25/2021 Scale: None